MAGNETIC ICHIMAGA

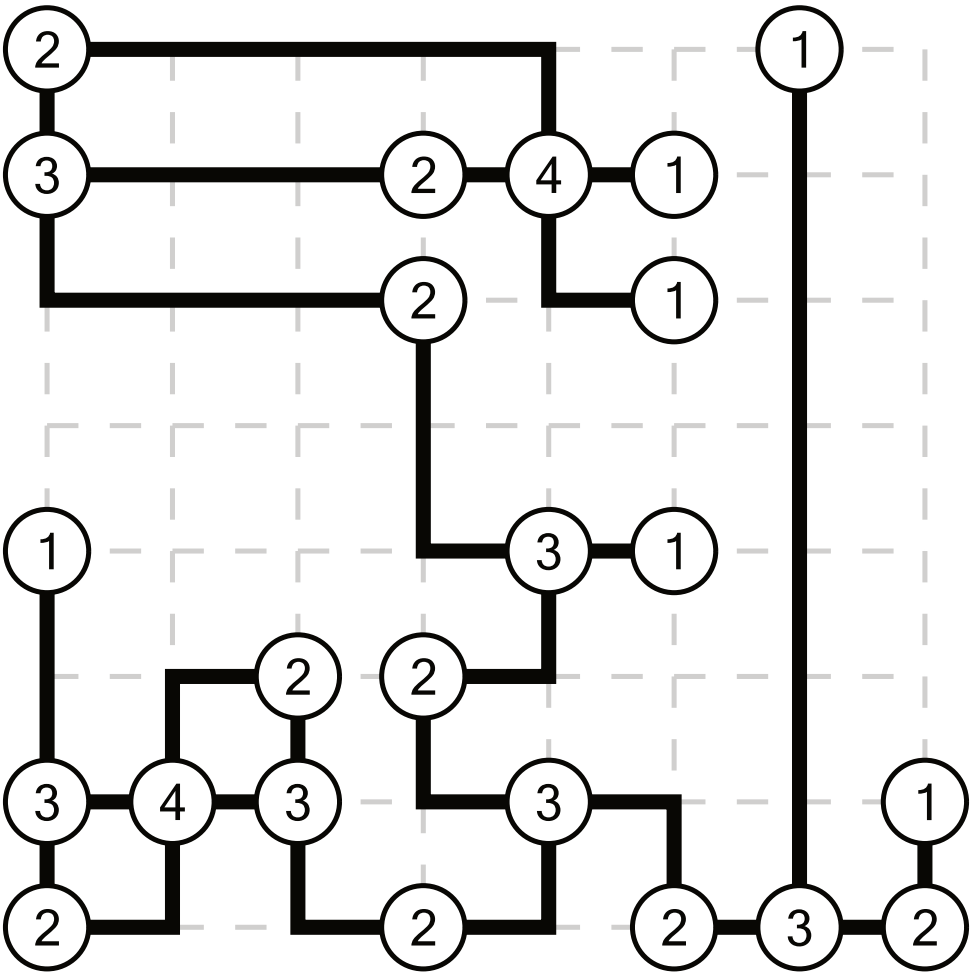

★★★☆☆

MAGI-3-013S; © SortedPuzzles